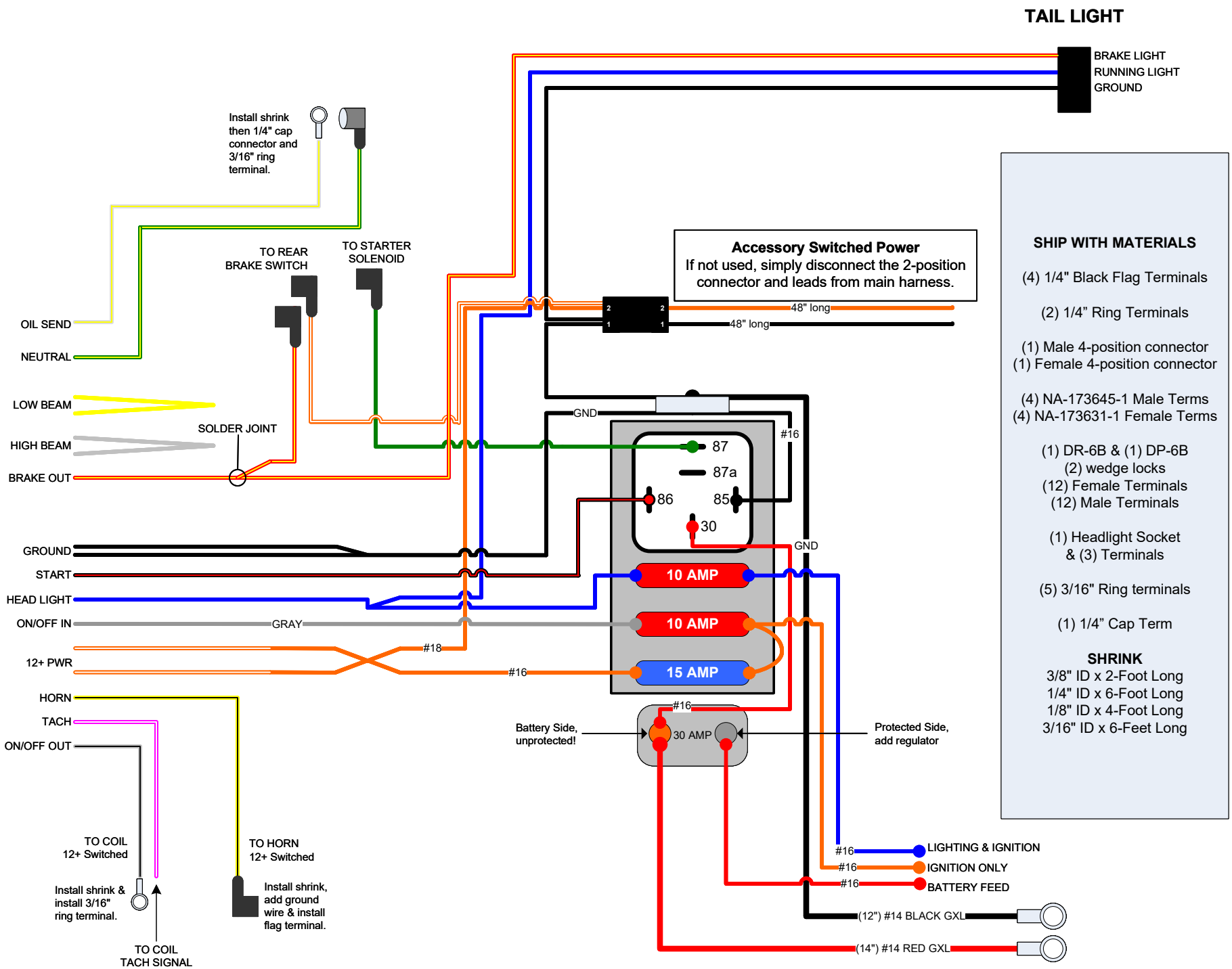
TAIL LIGHT
BRAKE LIGHT
RUNNING LIGHT
GROUND
Install shrink then 1/4" cap connector and 3/16" ring terminal.
TO REAR BRAKE SWITCH
TO STARTER SOLENOID
Accessory Switched Power
If not used, simply disconnect the 2-position connector and leads from main harness.
48" long
48" long
OIL SEND
NEUTRAL
LOW BEAM
HIGH BEAM
BRAKE OUT
SOLDER JOINT
GND
#16
87
87a
86
85
30
GND
GROUND
START
HEAD LIGHT
ON/OFF IN
GRAY
12+ PWR
#18
#16
10 AMP
10 AMP
15 AMP
HORN
TACH
ON/OFF OUT
#16
Battery Side, unprotected!
30 AMP
Protected Side, add regulator
TO COIL 12+ Switched
Install shrink & install 3/16" ring terminal.
TO COIL TACH SIGNAL
TO HORN 12+ Switched
Install shrink, add ground wire & install flag terminal.
#16
LIGHTING & IGNITION
#16
IGNITION ONLY
#16
BATTERY FEED
(12") #14 BLACK GXL
(14") #14 RED GXL
SHIP WITH MATERIALS
(4) 1/4" Black Flag Terminals
(2) 1/4" Ring Terminals
(1) Male 4-position connector
(1) Female 4-position connector
(4) NA-173645-1 Male Terms
(4) NA-173631-1 Female Terms
(1) DR-6B & (1) DP-6B
(2) wedge locks
(12) Female Terminals
(12) Male Terminals
(1) Headlight Socket
& (3) Terminals
(5) 3/16" Ring terminals
(1) 1/4" Cap Term
SHRINK
3/8" ID x 2-Foot Long
1/4" ID x 6-Foot Long
1/8" ID x 4-Foot Long
3/16" ID x 6-Feet Long